1.

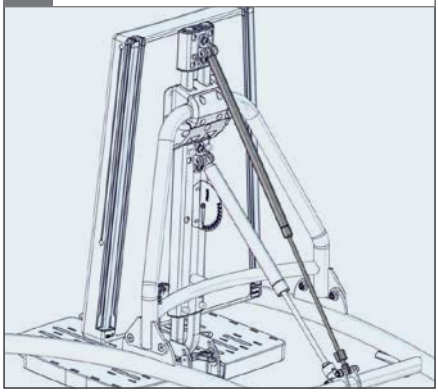

2.

3. 2 x ⬡ 4 mm, ⬡ 6 mm 13 mm

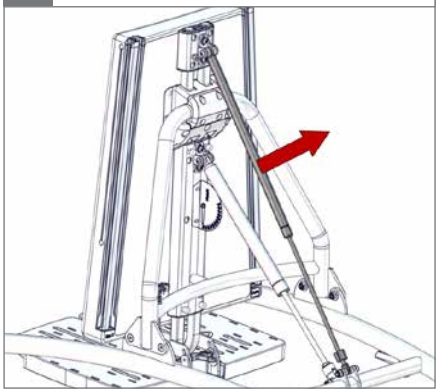

4. 2 x ⬡ 4 mm - 3 Nm

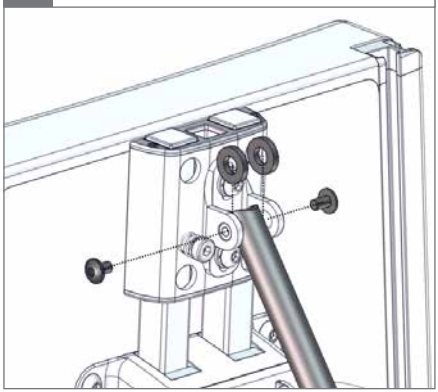

5. ⬡ 6 mm 13 mm - 3 Nm

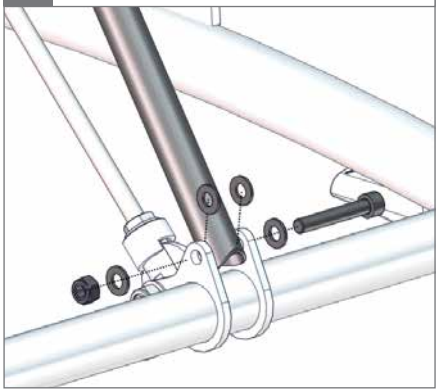
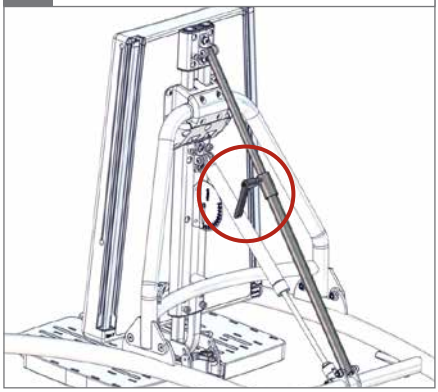
6.