## 1. Combi Frame:x & Multi Frame

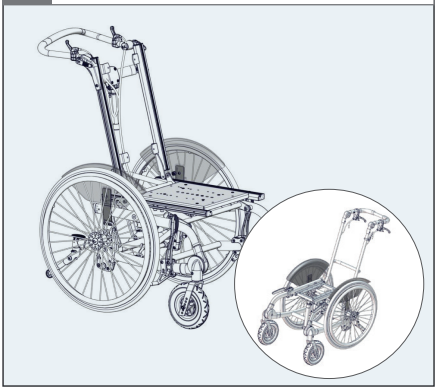

## 2.

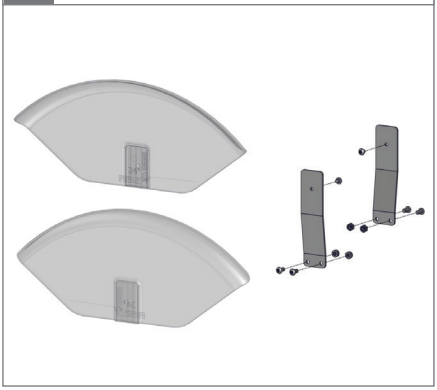

## 3. ⬡ 4 mm - 🔧 10 mm

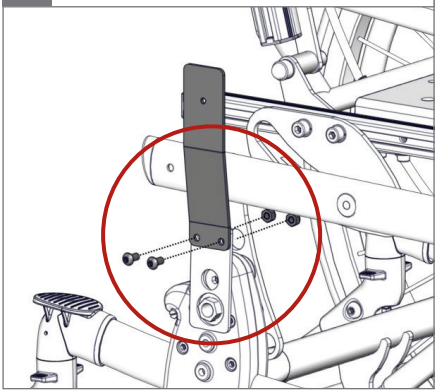

## 4. ⬡ 4 mm - 🔧 10 mm, 2,5 Nm

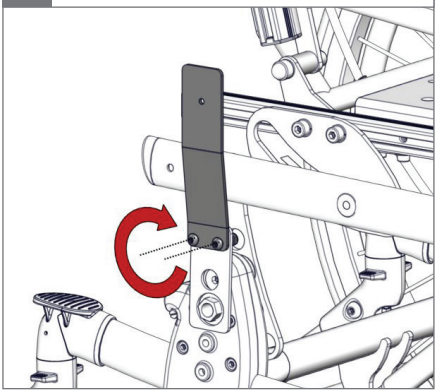

## 5. ⬡ 4 mm

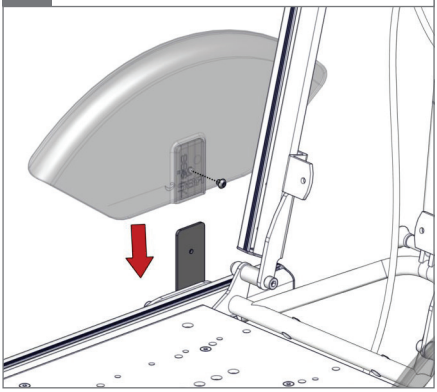
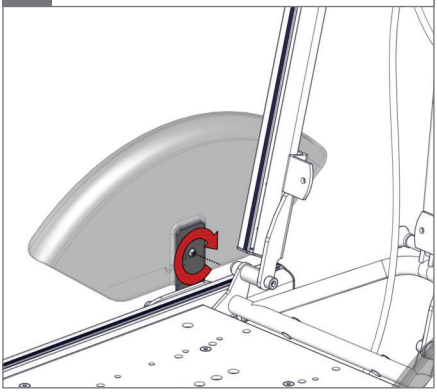
## 6. ⬡ 4 mm, 2,5 Nm